

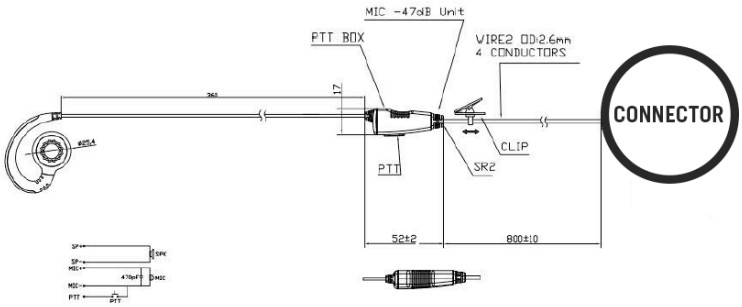


# Model: TX300M-(xxx)

| Connector Suffix | | Radio Models |
|---|---|---|
| H07 |  | HYTERA X1P/ X1E |

| Speaker Specification: | |
|---|---|
| **Type:** | Transducer Moving coil dynamic speaker |
| **Impedance:** | 32 Ω ± 15% @1 kHz |
| **Sensivity:** | 115 dB ± 3 dB / 1 mW on a coupler |
| **Resonance freq:** | 4 kHz ± 20% |
| **Frequency respond:** | 400 - 9 kHz |
| **Rated input power:** | 1 mW |
| **Maximum input power:** | 300mW |

| Microphone Specification: | |
|---|---|
| **Sensivity range:** | -34 ± 2 dB RL = 2.2 kΩ Vs = 3.0 V(DC) 1 kHz 0dB=1 V/Pa |
| **Impedance max:** | 2.2 kΩ 1 kHz (RL = 2.2 kΩ) |
| **Frequency:** | 20 - 20 kHz |
| **Current consumption max:** | 0.5 uA RL = 2.2 kΩ Vs = 3.0 V(DC) |
| **Operation voltage range:** | 1.0 V - 10 V(DC) |
| **Max sound pressure level:** | 115 dB S.P.L. |