

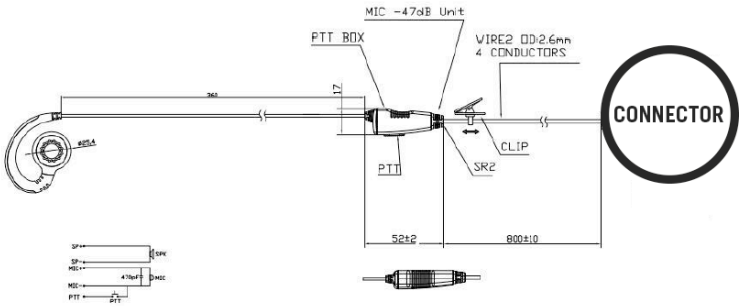

Model: TX300M- (xxx)

Connector Suffix		Radio Models
H04	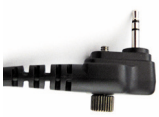	HYTERA TC320/1688

Speaker Specification:	
Type:	Transducer Moving coil dynamic speaker
Impedance:	32 Ω ± 15% @1 kHz
Sensivity:	115 dB ± 3 dB / 1 mW on a coupler
Resonance freq:	4 kHz ± 20%
Frequency respond:	400 - 9 kHz
Rated input power:	1 mW
Maximum input power:	300mW

Microphone Specification:	
Sensivity range:	-34 ± 2 dB RL = 2.2 kΩ Vs = 3.0 V(DC) 1 kHz 0dB=1 V/Pa
Impedance max:	2.2 kΩ 1 kHz (RL = 2.2 kΩ)
Frequency:	20 - 20 kHz
Current consumption max:	0.5 uA RL = 2.2 kΩ Vs = 3.0 V(DC)
Operation voltage range:	1.0 V - 10 V(DC)
Max sound pressure level:	115 dB S.P.L.