ECCO®

5 YEAR NO-HASSLE WARRANTY



DIRECTIONAL LEDS

SAE CLASS 1 | CALIFORNIA TITLE 13 (A, B & R only) | R10 | R65 (excluding tri-color) | RoHS

ED3712 Series

Dual-Color Multi-Mount

The ED3712 series directional is a low profile LED. This warning light offers the flexibility of two or three different color outputs within a single unit, comprised of high intensity LEDs, six of each color. Ideal for a wide variety of applications, the ED3712 offers the flexibility of four mounting options: surface mount, tilt bracket, self-adhesive mount, and edge mount (all necessary hardware is included with each light). Featuring 69 flash patterns and synchronization capability, this super bright LED is designed for maximum light output at all angles. Each model can be programmed to flash each color option individually or alternately.

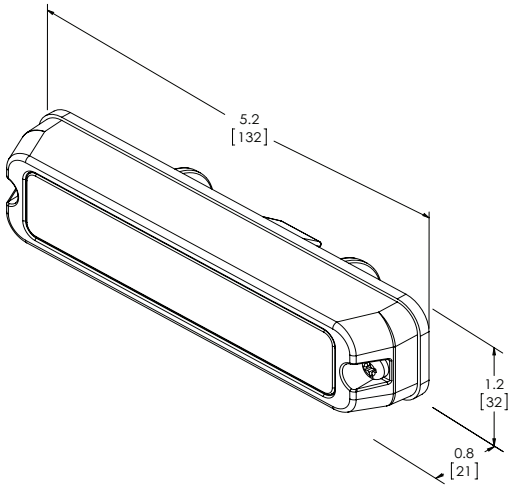

Models

PART NO.	TYPE	ILLUMINATION COLOR OPTIONS	AMPS	FLASH PATTERNS
ED3712XX	Dual	AB AC AG AR BC RB RC	1.25	69

Replace "XX" in part number with desired color: A=amber, B=blue, C=clear, G=green, R=red

Design Features

- 12-24 VDC
- 12 high intensity LEDs (ED3712XX)
- Low profile with 4 mounting options
- Sync-capable
- Aluminum housing, polycarbonate lens
- Temperature Range: -22°F to +122°F (-30°C to +50°C)

Mounting Options



Tilt Bracket / Self-Adhesive



⚠ **WARNING:** Cancer and Reproductive Harm – www.P65 Warnings.ca.gov