ATLONA
a PANDUIT company

OMEGA™

Two-Input Switcher for HDMI and USB-C with USB Hub

Application Programming Interface
1.0

AT-OME-MH21

Atlona Manuals
Switchers

Version Information

Version	Release Date	Notes
2	Sept 2022	Updated to new color format

Introduction

General

This document provides an alphabetical list of commands available for AT-OME-MH21. Commands are case-sensitive. If the command fails or is entered incorrectly, then the feedback is “Command FAILED”. Commands can be sent using RS-232, Telnet, SSH, or TCP. There should be a 500 millisecond delay between each command sent to the unit. The default port for Telnet is 23. TCP ports are 9000 and 9002.

IMPORTANT: Each command is terminated with a carriage-return (0x0d) and the feedback is terminated with a carriage-return and line-feed (0x0a).

Ports

This product can communicate directly with local and remote RS-232 ports using a direct TCP socket connection. Refer to the table below for the port assignment for this product. For ports connected to RS-232 interfaces, no additional payload is required to transmit data to the device. All data sent to the respective TCP port will be sent bit-for-bit to the RS-232 output. Note that if feedback is required from the RS-232 device, the TCP socket must be kept open. This product does not provide buffer or queuing registers. Therefore, any data from the RS-232 port that is received while the TCP socket connection is closed, will be lost.

Port	Description
9000	MCU (similar to Telnet)
9002	Local RS-232 port

Example:

With the device IP address of 192.168.1.100 and a PJLINK projector connected to the RS-232 output.

1. Open a TCP socket to 192.168.1.100:9002 and send the following command string:

   ```
   %1POWR 1\x0D
   ```

2. The projector will respond with the following, using the same socket connection:

   ```
   $1POWR=OK\x0D
   ```

RS-232

A 4-pin captive screw connector has been included for RS-232.

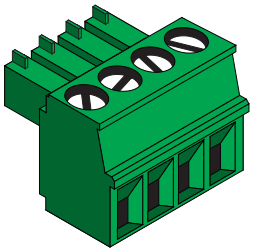

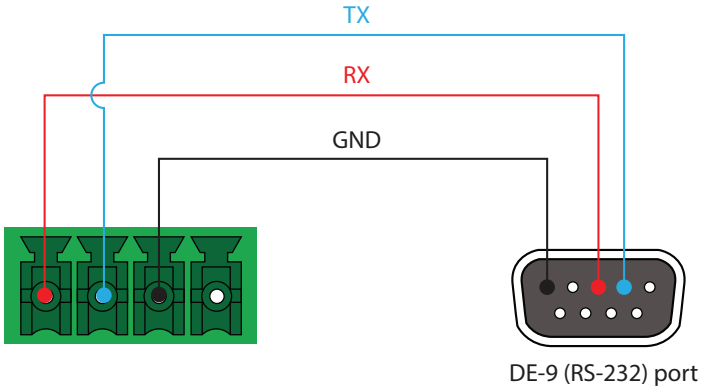

RS-232 is often connected through a DB 9-pin to captive screw connector. The pins will have functions associated with them, some will be unassigned.

NOTE: Typical DB9 connectors use pin 2 for TX, pin 3 for RX, and pin 5 for ground. On some devices functions of pins 2 and 3 are reversed.

Pin out will be determined by the RS-232 cable and connect as RX (receive), TX (transmit) and GND (ground). GND is shared with the IR IN port.

Baud parameters must be met for control signals to pass. The parameters can be updated through the built in webGUI. The defaults for the RS-232 ports are: 9600, 8-bit, None, 1.

Commands

Command	Description
All#	Sets all input and outputs to the 1-to-1 state
APwrOffTime	Sets the power-off time interval
AutoPwr	Enables or disables automatic power-off on the unit
AutoSW	Enable or disables auto switching or display auto switching status
Blink	Enables or disables blinking of the **POWER** button on the front panel
CliIPAddr	Sets the IP address of the Telnet client
CliMode	Sets the login mode of the Telnet client
CliPass	Set the password for the Telnet client
CliPort	Sets the listening port of the Telnet client
CliUser	Sets the username for the Telnet client
CommaWait	Adds a 5 second delay between commands, when a comma is included
CSpara	Sets the baud rate, data bits, parity bit, and stop bits for the serial port
CtlType	Sets the control protocol used to communicate with the display device
EDIDMSet	Assigns an EDID to the specified input
EDIDOut	Copies the downstream EDID to memory.
HDCPSet	Sets the HDCP reporting mode for the specified input
help	Displays the available list of commands
InputBroadcast	Enables or disables broadcast mode
InputFormat	Returns the video format on the specified input
InputStatus	Displays the status for each input
IPCFG	Displays the current network settings for the AT-OME-MH21
IPDHCP	Enables or disables DHCP mode on the AT-OME-MH21
IPLogin	Enables or disables login credentials when starting a Telnet session
IPPort	Sets the Telnet listening port for the AT-OME-MH21
IPQuit	Closes the current Telnet session
IPStatic	Sets the static IP address, subnet mask, and gateway for the AT-OME-MH21
IPTimeout	Specifies the time interval of inactivity before the Telnet session is closed
IRSetCmd	Defines the IR command used by the AT-OME-MH21
List EDID	Displays a list of available internal EDID data
Lock	Locks the front panel buttons
Mreset	Resets the AT-OME-MH21 to factory-default settings
ProjSWMode	Sets the time interval before the “display on” command is sent
ProjWarmUpT	Sets the display warm-up interval, in seconds
PWSTA	Displays the power status of the AT-OME-MH21
RepCmdTime	Sets the number of time a command will be sent
RepeatCmd	Enables or disables the RepCmdTime feature
RHostName	Displays the hostname of the unit
RS232zone	Send a command from the RS-232 port of the AT-OME-MH21
ScalerMode	Enables or disables the scaler on the AT-OME-MH21
SetCmd	Assigns an RS-232 or IP command to the specified button on the front panel
SHostName	Sets the hostname of the AT-OME-MH21
Status	Displays which input is routed to the HDMI output
System	Displays the status of the AT-OME-MH21
TrigCEC	Triggers the stored CEC command
TrigIP	Triggers the stored IP command
TrigIR	Triggers the stored IR command

Commands

Command	Description
TrigRS	Triggers the stored RS-232 command
Type	Displays the model of the transmitter
Unlock	Unlocks the front panel buttons
UsbCSS	Enables or disables the USB-C Super Speed mode
UsbHostRoute	Sets the routing state of the USB host
UsbMode	Sets the USB mode for the AT-OME-MH21
Version	Displays the current firmware version of the AT-OME-MH21
VOUTMute	Mutes / unmutes the output audio
x1$	Enables or disables video output on the HDMI port
x1All	Routes the specified input to all outputs
x1AVx1	Routes the specified input to the HDMI output

All#

Resets all inputs and outputs to a 1-to-1 state. When set to the state, input 1 is routed to output 1, input 2 is routed to output 2, and so on.

Syntax
APwrOffTime X

This command does not require any arguments

Example
All#

Feedback
x1AVx1

APwrOffTime

Set the time interval, in seconds, before the command to power-off the display is sent, once an A/V signal is no longer detected. Use the sta argument to display the current setting.

Syntax
APwrOffTime X

Parameter	Description	Range
X	Time interval	5 ... 3600, sta

Example
APwrOffTime 120

Feedback
APwrOffTime 120

AutoPwr

Enables or disables automatic power-off on the unit. Specify the sta argument to return the current state. Execute the APwrOffTime command to set the power-off time interval.

Syntax
AutoPwr

Parameter	Description	Range
X	State	on, off, sta

Example
AutoPwr on

Feedback
AutoPwr on

AutoSW

Enables or disables auto switching or display auto switching status.

Syntax
AutoSW X

Parameter	Description	Range
X	Value	on, off, sta

Example
AutoSW on

Feedback
AutoSW on

Blink

Enables or disables blinking of the **POWER** button on the front panel. When set to on, the **POWER** button will flash, alternating between red and blue, and can be used to physically identify the unit on a network. The **POWER** button will flash until the Blink off command is executed. on = enables blinking; off = disables blinking; sta = displays the current setting. The default setting is off.

Syntax
Blink X

Parameter	Description	Range
X	Value	on, off, sta

Example
Blink on

Feedback
Blink on

CliIPAddr

Sets the IP address of the controlled device. The IP address must be specified in dot-decimal notation. Use the sta argument to display the IP address of the device. DHCP must be disabled before using this command. Refer to the IPDHCP command for more information.

Syntax
CliIPAddr X

Parameter	Description	Range
X	IP address	0 ... 255 (per byte)

Example
CliIPAddr 192.168.1.61

Feedback
CliIPAddr 192.168.1.61

CliMode

Sets the login mode of the controlled device. login = requires login credentials, non-login = no login credentials required. Use the sta argument to display the current setting.

Syntax
CliMode X

Parameter	Description	Range
X	Value	login, non-login, sta

Example
CliMode login

Feedback
CliMode login

CliPass

Sets the password for the controlled device. Execute the CliPass command without arguments to display the current password. The default password is Atlona.

Syntax
CliPass X

Parameter	Description	Range
X	Password	20 characters (max.)

Example
CliPass R3ind33r

Feedback
CliPass R3ind33r

CliPort

Sets the listening port for the controlled device. Use the sta argument to display the current listening port. The default port is 23. Use the sta argument to display the current setting.

Syntax
CliPort X

Parameter	Description	Range
X	Port	0 ... 65535, sta

Example
CliPort 50

Feedback
CliPort 50

CliUser

Sets the username for the controlled device. Execute the CliUser command without arguments to display the current username.

Syntax
CliUser X

Parameter	Description	Range
X	Username	20 characters (max.)

Example
CliUser BigBoss

Feedback
CliUser BigBoss

CommaWait

Creates a 5-second delay between commands, when multiple commands are specified in the **Set command** fields, under the **RS-232/IP commands** section of the web GUI. Refer to the User Manual for more information. on = enable, off = disable. Use the sta argument to display the current setting.

Syntax
CommaWait X

Parameter	Description	Range
X	Value	on, off, sta

Example
CommaWait on

Feedback
CommaWait on

CSpara

Sets the baud rate, data bits, parity bit, and stop bits for the serial device. Use the sta argument to display the current serial port settings. Each argument must be separated by a comma; no spaces are permitted. Brackets must be used when executing this command.

Syntax
CSpara[W,X,Y,Z]

Parameter	Description	Range
W	Baud rate	2400, 4800, 9600, 19200, 38400, 57600, 115200
X	Data bits	7, 8
Y	Parity bit	None, Odd, Even
Z	Stop bits	1, 2

Example
CSpara[115200,8,0,1]
CSpara[sta]

Feedback
CSpara[115200,8,0,1]
CSpara [115200,8,0,1]

CtlType

Sets the control protocol used to communicate with the display device. Use the sta argument to display the current setting.

Syntax
CtlType X

Parameter	Description	Range
X	Value	rs-232, ip, cec, sta

Example
CtlType ip

Feedback
CtlType ip

EDIDMSet

Assigns an EDID to the specified input. The EDID can be either one of the internal preprogrammed EDIDs or a custom EDID that can be stored in memory. A brief description of each preprogrammed EDID is listed in the table below. Specify the `default` argument to use the downstream EDID. Specify the `save1` argument, in the second parameter, to use the EDID stored in memory. To return the EDID assigned to an input, use the `sta` argument.

Syntax
EDIDMSetX Y

Parameter	Description	Range
X	Input	1 ... 2
Y	EDID	default, int1 ... int7, save1, sta

Example
EDIDMSet1 int3

Feedback
EDIDMSet1 int3

EDID (parameter Y)	Description
int1	ATL 3840x2160P60 2CH
int2	ATL 1920x1200 2CH
int3	ATL 1920x1080P 2CH
int4	ATL 1366x768 2CH
int5	ATL 1280x800 2CH
int6	ATL 1280x720 2CH
int7	ATL 1024x768 2CH

EDIDOut

Copies the downstream EDID to memory.

Syntax
EDIDOut X

Parameter	Description	Range
X	Memory location	mem1

Example
EDIDOut mem1

Feedback
EDIDOut mem1

HDCPSet

Set the HDCP reporting mode of the specified port. Some computers will send HDCP content if an HDCP-compliant display is detected. on = reports to the source device that the display (sink) is HDCP-compliant, off = reports to the source device that the display (sink) is not HDCP-compliant (HDCP content will not be sent), auto = uses the attributes of the display device to accept or not accept HDCP content. Setting this value to off *does not* decrypt HDCP content. Use the sta argument to display the current setting.

Syntax
HDCPSet X

Parameter	Description	Range
X	Value	on, off, auto, sta

Example
HDCPSet 1 on

Feedback
HDCPSet 1 on

help

Displays the list of available commands. To obtain help on a specific command, enter the **help** command followed by the name of the command.

Syntax
help [X]

Parameter	Description	Range
X	Command name (optional)	Command

Example
help

Feedback
help
PWSTA
System
Type
Version
Blink
...
...

InputBroadcast

Enables or disables broadcast mode. The default setting is off.

Syntax
InputBroadcast X

Parameter	Description	Range
X	State	on, off, sta

Example
InputBroadcast on

Feedback
InputBroadcast on

InputFormat

Returns the video format on the specified input. No space should exist between the command and the argument.

Syntax
InputFormatX

Parameter	Description	Range
X	Input	1, 2

Example
InputFormat1

Feedback
3840x2160P29:8Bits RGB

InputStatus

Displays the status of the specified input as either a 0 or 1. If a source is detected on the input, then a 1 will be displayed. Inputs with no source connected will display a 0.

Syntax
InputStatusX

Parameter	Description	Range
X	User name	20 characters (max)

Example
InputStatus1

Feedback
InputStatus1 1

IPCFG

Displays the current network settings for the AT-OME-MH21.

Syntax
IPCFG

This command does not require any parameters

Example
IPCFG

Feedback
IP Addr 192.168.11.176
Netmask 255.255.255.0
Gateway 192.168.11.1
IP Port 23

IPDHCP

Enables or disables DHCP mode on the AT-OME-MH21. on = DHCP mode ON; off = DHCP mode OFF; sta = displays the current setting. If this feature is disabled, then a static IP address must be specified. The default setting is DHCP = ON.

Syntax
IPDHCP X

Parameter	Description	Range
X	Value	on, off, sta

Example
IPDHCP on

Feedback
IPDHCP on

IPLogin

Enables or disables the use of login credentials when initiating a Telnet session on the AT-OME-MH21. If this feature is set to on, then the AT-OME-MH21 will prompt for both the username and password. Use the same credentials as the web GUI. on = login credentials required; off = no login required. Use the sta argument to display the current setting. The default setting is on.

Syntax
IPLogin X

Parameter	Description	Range
X	Value	on, off, sta

Example
IPLogin off

Feedback
IPLogin off

IPPort

Sets the TCP/IP listening port for the AT-OME-MH21.

Syntax
IPPort X

Parameter	Description	Range
X	Port	0 ... 65535, sta

Example
IPPort 230

Feedback
IPPort 230

IPQuit

Closes the current Telnet session.

Syntax
IPQuit

This command does not require any arguments

Example
IPPort 230

Feedback
IPPort 230

IPStatic

Sets the static IP address, subnet mask, and gateway (router) address of the AT-OME-MH21. Before using this command, DHCP must be disabled on the AT-OME-MH21. Refer to the IPDHCP command for more information. Each argument must be entered in dot-decimal notation and separated by a space. The default static IP address of the AT-OME-MH21 is 192.168.1.254.

Syntax
IPStatic X Y Z

Parameter	Description	Range
X	IP address	0 ... 255 (per byte)
Y	Subnet mask	0 ... 255 (per byte)
Z	Gateway (router)	0 ... 255 (per byte)

Example
IPStatic 192.168.1.112 255.255.255.0 192.168.1.1

Feedback
IPStatic 192.168.1.112 255.255.255.0 192.168.1.1

IPTimeout

Specifies the time interval of inactivity before the TCP/IP session is terminated. When terminated, both the Telnet and web GUI session will be closed. The default setting is 300 seconds.

Syntax
IPTimeout X

Parameter	Description	Range
X	Interval (in seconds)	1 ... 60000

Example
IPTimeout 300

Feedback
IPTimeout 300

IRSetCmd

Defines the IR command used by the AT-OME-MH21 to perfom the specified function on the display (sink) device. For example, to define the “display off” command, use the `off` argument as the first parameter, then locate the equivalent “power off” command for the display by consulting the display’s User Manual. Specify the command as the second argument.

Syntax
IRSetCmd X[Y]

Parameter	Description	Range
X	Action	on, off, vol+, vol-, mute, muteon, muteoff, input
Y	Command	String, sta

Example
IRSetCmd off poweroff

Feedback
IRSetCmd off poweroff

List EDID

Displays the full of internal EDID banks and their corresponding numbers.

Syntax
List EDID

This command does not require any arguments

Example
List EDID

Feedback
IntEDID_1:ATL 3840x2160P60 2CH
IntEDID_2:ATL 1920x1200 2CH
IntEDID_3:ATL 1920x1080P 2CH
IntEDID_4:ATL 1366x768 2CH
IntEDID_5:ATL 1280x800 2CH
IntEDID_6:ATL 1280x720 2CH
IntEDID_7:ATL 1024x768 2CH

Lock

Locks the buttons on the front panel. This feature is useful when the unit is installed in a rack environment or other remote location, to prevent accidental pressing of the front-panel buttons. Also refer to the Unlock command.

Syntax
Lock

This command does not require any parameters

Example
Lock

Feedback
Lock

Mreset

Resets the AT-OME-MH21 to factory-default settings.

Syntax
Mreset

This command does not require any parameters

Example
Mreset

Feedback
Mreset

ProjSWMode

Sets the time interval before the “display on” command is sent. This value should be the same as the projector’s delay setting. Use the sta argument to display the current setting.

Syntax
ProjSWMode X

Parameter	Description	Range
X	Time interval	0 ... 300, sta

Example
ProjSWMode 120

Feedback
ProjSWMode 120

ProjWarmUpT

Sets the display warm-up interval, in seconds. During this time, the display will not accept any commands until the “power on” command has been processed. Use the sta argument to display the current setting.

Syntax
ProjWarmUpT X

Parameter	Description	Range
X	Time interval	0 ... 300, sta

Example
ProjWarmUpT 120

Feedback
ProjSWMode 120

PWSTA

Displays the current power state of the AT-OME-MH21.

Syntax
PWSTA

This command does not require any parameters

Example
PWSTA

Feedback
PWON

RepCmdTime

Sets the number of time a command will be sent. Some devices may require that a command be sent multiple times before an acknowledge message is sent back to the AT-OME-MH21. Specify the sta argument to display the current setting.

Syntax
RepCmdTime X

Parameter	Description	Range
X	Times to repeat command	2 ... 4, sta

Example
RepCmdTime 3

Feedback
RepCmdTime 3

RepeatCmd

Enables or disables the RepCmdTime feature. Specify the sta argument to display the current setting.

Syntax
RepeatCmd X

Parameter	Description	Range
X	Status	on, off, sta

Example
RepeatCmd on

Feedback
RepeatCmd on

RHostName

Displays the hostname of the unit. Execute the SHostName command to set the hostname.

Syntax
RHostName

This command does not require any parameters

Example
RHostName

Feedback
RHostName OMEMH21-068823

RS232zone

Sends commands to the HDBaseT device. Refer to the User Manual of the display device for a list of available commands. Brackets must be used when specifying the command argument. The command line must not contain any spaces.

Syntax
RS232zone[X]

Parameter	Description	Range
X	Command	String

Example
RS232zone[poweron]

Feedback
RS232zone[poweron]

ScalerMode

Sets the scaler mode. When set to OFF, the scaler is bypassed, and the output signal will be the same as the input signal. The default value is OFF. Specify the sta argument to return the current setting.

Syntax
ScalerMode X

Parameter	Description	Range
X	State	on, off, sta

Example
ScalerMode on

Feedback
ScalerMode on

SetCmd

Defines the command used by the AT-OME-MH21, to perfom the specified function on the display (sink) device. For example, to define the “power off” command, locate the equivalent “power off” command for the display by consulting the display’s User Manual. Once the desired command is located, assign it to the equivalent command used by the AT-OME-MH21.

Syntax
SetCmd X[Y]

Parameter	Description	Range
X	Action	on, off, vol+, vol-, mute, fbkoff, fbkon, fbkmute
Y	End-of-Line (EOL) character	None, CR, LF, CRLF, Space

Example
SetCmd on CRLF

Feedback
SetCmd on CRLF [PWON]

SHostName

Sets the hostname of the unit. The hostname can be changed to easily identify the unit within the Atlona Management System (AMS) or a network. If using a custom hostname, it must meet the hostname standards defined here: https://tools.ietf.org/html/rfc1123

Syntax
SHostName X

Parameter	Description	Range
X	Name	String (maximum 15 characters)

Example
SHostName MH21_ConfRm

Feedback
SHostName MH21_ConfRm

Status

Displays which input is connected to output 1. The parameter 1 is required.

Syntax
StatusxY

Parameter	Description	Range
Y	Output (required)	1

Example
Statusx1

Feedback
x1AVx1

System

Displays the status of the AT-OME-MH21. The dev argument will display verbose format. The sta argument will display pretty information.

Syntax
System X

Parameter	Description	Range
X	Request	sta, dev

Example
Status sta

Feedback
Model: AT-OME-MH21
MAC Addr: B8-98-B0-06-88-23
Address Type: DHCP
IP Addr: 192.168.11.176
Netmask: 255.255.255.0
Gateway: 192.168.11.1
HTTP Port: 80
Telnet Port: 23
SSH Port: 22
Firmware: 0.5.23_DS01
On/Up Time <dd HH:mm:ss>: 00 02:13:20

TrigCEC

Sends the specified command to the display using CEC. The output must always be specified and set to the value of 1. Do not add a space between the command and the first argument.

Syntax
TrigCECX Y

Parameter	Description	Range
X	Zone	1
Y	Command	on, off, vol+, vol-, mute

Example
TrigCEC1 on

Feedback
TrigCEC1 on

TrigIP

Sends the specified command to the display using IP. Do not add a space between the command and the first argument.

Syntax
TrigIPX Y

Parameter	Description	Range
X	TCP	1, 2
Y	Command	on, off, vol+, vol-, mute

Example
TrigIP1 on

Feedback
TrigIP1 on

TrigIR

Sends the specified command to the display using IR. Do not add a space between the command and the first argument.

Syntax
TrigIR X

Parameter	Description	Range
Y	Power state	on, off, vol+, vol-, mute

Example
TrigIR on

Feedback
TrigIR on

TrigRS

Sends the specified command to the display using RS-232. The output must always be specified and set to the value of 1. Do not add a space between the command and the first argument.

Syntax
TrigRSX Y

Parameter	Description	Range
X	Zone	1
Y	Power state	on, off, vol+, vol-, mute

Example
TrigRS1 on

Feedback
TrigRS1 on

Type

Displays the SKU of the AT-OME-MH21.

Syntax
Type

This command does not require any parameters

Example
Type

Feedback
AT-OME-MH21

Unlock

Unlocks the buttons on the front panel. Also refer to the Lock command.

Syntax
Unlock

This command does not require any parameters

Example
Unlock

Feedback
Unlock

UsbCSS

Enables or disables the USB-C port Super Speed feature. This feature is enabled by default. Specify the sta argument to return the current setting.

Syntax
UsbCSS X

Parameter	Description	Range
Y	State	on, off, sta

Example
UsbCSS on

Feedback
UsbCSS on

UsbMode

Sets the USB mode for the AT-OME-MH21. Specify the sta argument to return the current setting.

Syntax
UsbMode X

Parameter	Description	Range
X	Mode	follow usb, manual, sta

Example
UsbMode follow usb

Feedback
UsbMode follow usb

UsbHostRoute

Sets the routing state of the USB host. 1 = USB-C, 2 = USB HOST. Specify the sta argument to return the current setting.

Syntax
USBHostRoute X

Parameter	Description	Range
X	Port	1, 2

Example
UsbHostRoute 1

Feedback
UsbHostRoute 1

Version

Displays the current firmware version of the unit.

Syntax
Version

This command does not require any parameters

Example
Version

Feedback
1.0

VOUTMute

Enables or disables muting of the output audio. Specify the sta argument to return the current setting.

Syntax
VOUTMute X

Parameter	Description	Range
X	State	on, off, sta

Example
VOUTMute on // enable muting

Feedback
VOUTMute on

x1$

Enables or disables video output on the HDMI port. Specify the sta argument to return the current setting.

Syntax
x1$ Y

Parameter	Description	Range
Y	State	on, off, sta

Example
x1$ off // disable video

Feedback
x1$ off

x1All

Routes the specified input to all outputs.

Syntax
x1All

Parameter	Description	Range
X	Input	1, 2

Example
x1All

Feedback
x1AVx1

x1AVx1

Routes the specified input to the HDMI output.

Syntax
xXAVx1

Parameter	Description	Range
X	Input	1 (USB-C), 2 (HDMI)

Example
x2AVx1

Feedback
x2AVx1