LD (2-3/8x36) 2' V-S/O

KIT NUMBER 5.930.0202.022

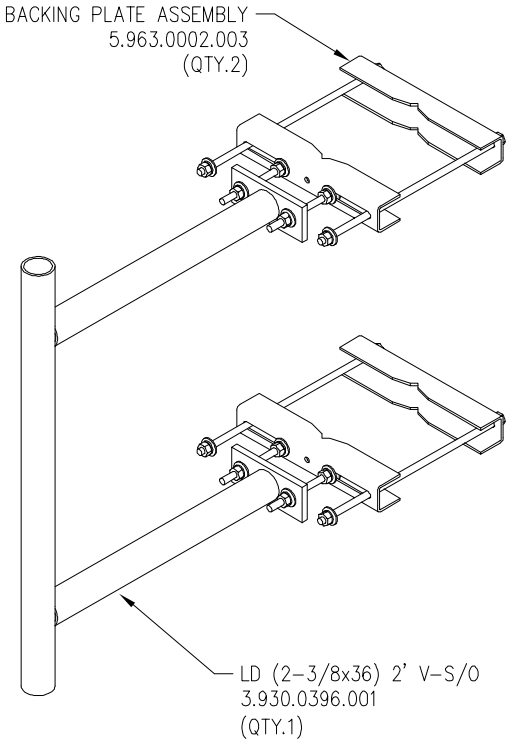

UNIVERSAL BACKING ASSEMBLY

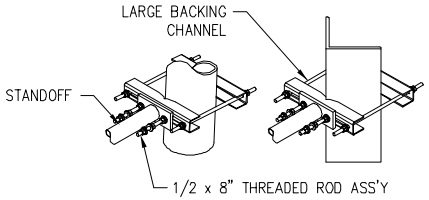

UNIVERSAL BACKING ASSEMBLY (5.963.0002.003)

(2)	3.963.0183.001	LARGE BACKING CHANNEL
(2)	4.963.0019.218	1/2" x 18" THREADED ROD ASSY
(2)	4.963.0019.208	1/2" x 8" THREADED ROD ASSY
(4)	1201122	1/2" FLAT WASHER
(4)	1201121	1/2" LOCK WASHER
(4)	1201120	1/2" NUT

REV.	REV. BY:	CHK. BY:	DESCRIPTION	DATE
B	AJM	MRH	SCH 40 PIPE CHANGE OUT	17 FEB 05
A	AJM	MRH	ISSUED FOR DISTRIBUTION	31 JAN 05

TRYLON TSF

CUSTOMER:	SITE:	SCALE: NTS
DATE: 05 FEB 03	BY: DM	CHK: MRH / APP: BCP

COPYRIGHT HEREIN IS THE PROPERTY OF TRYLON MANUFACTURING COMPANY LTD. ALL DUPLICATION, RECORDING, DISCLOSURE OR USE IS PROHIBITED WITHOUT WRITTEN CONSENT OF TRYLON MANUFACTURING COMPANY LTD.

TITLE: LD (2-3/8x36) 2' V-S/O

DRAWING NO. 930.0202.022